Speed Synchronization of Multiple Motor

Bhushan Ambilkar[1], Sanket Dhamanse[2], Rahul Gaikwad[3], Nidhi Mishra[4]

[1]*Student, Dept. of Electrical Engineering, JSPM's BSIOTR, Wagholi, Pune, Maharashtra, India*
[2]*Student, Dept. of Electrical Engineering, JSPM's BSIOTR, Wagholi, Pune, Maharashtra, India*
[3]*Student, Dept. of Electrical Engineering, JSPM's BSIOTR, Wagholi, Pune, Maharashtra, India*
[4]*Assistent Professor, Dept. Of Electrical Engineering, JSPM's BSIOTR, Wagholi, Pune, Maharashtra, India*

Abstract In material industry many procedures required speed synchronization of more than one engines required all the while. Speed control of engine is essential particularly in the fields including modern applications, mechanical technology, material factories, and so forth. In all these application engine speed synchronization is stimulate in driven by engine drivers. There are such a large number of techniques which is utilized for controlling the DC machines. Among all these strategy ace slave synchronization is a broadly utilized method. Thus, speed control of DC engines at various load conditions is basic to accomplish a vigorous framework. The synchronization is finished by utilizing microcontroller chip which controls the ace slave whose speed is trailed by alternate engines which all must be synchronized. For PWM era Arduino mega microcontroller is utilized.

Key Words: **Microcontroller chip, driver circuit, speed synchronization.**

1.INTRODUCTION

Improvement of small scale processers has acquired critical changes movement control innovation. The advancement of fast computerized flag processors (DSP) makes ready to programming servo for engine control. Rapid DSP controller with preparing higher speed starts the time of computerized engine and movement control. Coordinate current (DC) engines have been broadly utilized as a part of numerous mechanical applications, for example, electric vehicles, steel moving plants, electric cranes, and automated controllers because of exact, wide, straightforward and Continuous control attributes. The improvement of elite engine drives is critical in Industrial and in addition other reason applications. For the most part, an elite engine drive framework must have great element speed and load directing reaction. DC drives, in view of their straightforwardness, simplicity of use, dependability and good cost have for some time been a spine of mechanical applications. DC drives are less intricate with a solitary power change from AC to DC. DC drives are typically more affordable for more strength appraisals. DC engines have a long convention of utilization as movable speed machines and an extensive variety of choices have developed for this reason. In these applications, the engine ought to be correctly controlled to give the coveted execution customarily rheostat armature control strategy was broadly utilized for the speed control of low power dc engines. However the controllability, inexpensiveness, higher productivity, and higher current conveying capacities of static power converters acquired a noteworthy change the execution of electrical drives. Numerous assortments of control plans, for example, relative (P), corresponding vital (PI), corresponding deduction fundamental (PID), versatile, and fluffy rationale controller (FLCs), have been created for speed control of dc engines.

2. Need of speed synchronization

Significant issues in applying an ordinary control calculation in a speed controller are the impacts of Non-linearity in a DC engine. The non-direct attributes of a DC engine, for example, immersion and rubbing could debase the execution of traditional controllers. Many propel demonstrate based control strategies, for example, factor structure control and model reference assenting control have been produced to diminish these impacts. Nonetheless, the execution of these techniques relies on upon the precision of framework models and parameters. For the most part, a precise non-direct model of a real DC engine is hard to discover, and parameter values acquired from framework distinguishing proof might be just surmised values. Indeed, even the PID controllers require correct numerical demonstrating.

In material industry many procedures require speed synchronization of more than one engines required all the while. Moving of fabric ought to be synchronized with the speed of weaving axle to maintain a strategic distance from harm and engine speed synchronization is imperative in transport line driven by numerous engines. Sudden load varieties may bring about chasing or oscillatory conduct in d.c. machines. This conduct can be adverse to the procedure. The carefully controlled d.c. machines can have abundantly irritated marvel attributable to poor examining period choice.

Traditionally processes are synchronized through mechanical transmission system consisting of a line shaft gears, pullers etc. Among the available software mechanisms master-slave synchronization is a widely used technique.

3. DESCRIPTION

Arduino controller will set the required speed and it will communicate with two slaves. Speed sensing is done by Hall effect sensor or magnetic sensors and speed controlling is done by using either SCR control or IGBT. There will be separate control for each. A UART is usually an individual (or part of) integrated circuit used for serial communication over a computer or peripheral device serial port .UART are now commonly included in microcontrollers. UART takes bytes of data and transmits the individual bits in a sequential fashion. At the destination second UART reassemble the bits into complete bytes. Each UART contain a shift register which is the fundamental method of conversion. The UART usually does directly generate or received the external signals used between different items of equipment. Separate interface devices are used to convert the logical level signals of the UART to and from the external signal levels. Standards for voltage signally are RS-232, RS-422, and RS-485 etc. When data from master controller will be given to slave microcontroller then that will be taken by the microcontroller as set point of the speed.

4.PROPOSED SYSTEM HARDWARE

Elements of Block Diagram:

- Arduino microcontroller
- D.C. Motor 1
- D.C. Motor2
- Stepper Motor
- Speed Detector
- LCD Display
- D.C. Motor drive –L293D
- Stepper Motor drive-L298

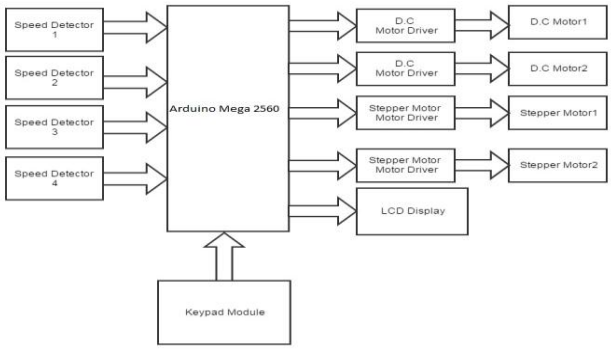

Fig -1: Block Diagram of Multi-Motor Synchronization Technique

- In this project we are using two dc motor and two stepper motor. The driver circuits used to drive the dc motor and stepper motor .
- The speed will be synchronized by using arduino microcontroller.
- LCD display is used to display the driver status.

Master Slave Configuration

In this venture we are utilize Master-slave design for a two engine framework is appeared in Fig. 2. The yield speed of the ace fills in as the speed reference for the slaves; fundamental thought here is that heap aggravations connected to the ace will be reflected and taken after by the slaves, yet unsettling influences in any the slaves won't be toss back to the ace, nor whatever other slave. This setup is prescribed in mechanical applications when synchronization in speed or position is not a fundamental, on the grounds that amid load impacts, synchronization between tomahawks can't be ensured.

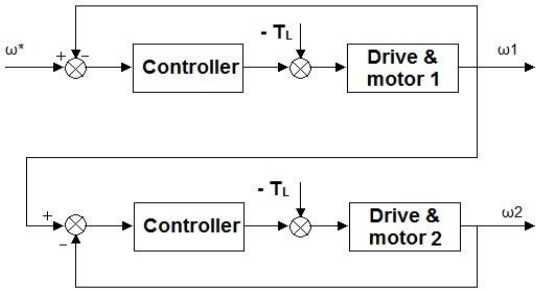

Fig -2 Structure of master slave technique

5.RESULTS

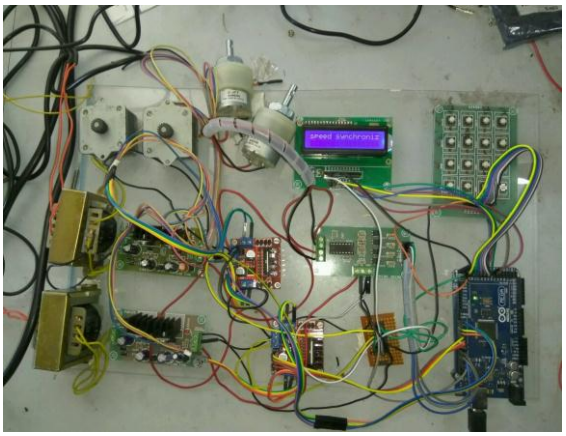

Fig -2: Circuit of Multi-Motor Synchronization Technique

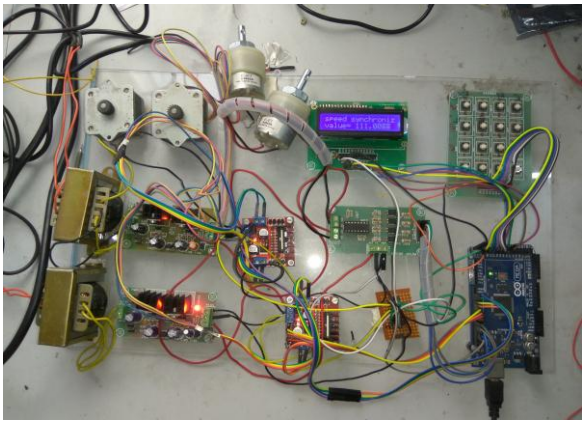

Fig – 3: LCD showing Output of synchronized speed

6. CONCLUSIONS

The venture "Multi-Motor Synchronization Technique" to synchronized the speed has been effectively tried and can be executed which is the best sparing.

Ace Slave arrangement is the easiest topology yet it is inalienable absence of firmness results in a proper procedure for multi-engine synchronization. It watched that synchronized speed of engines effortlessly accomplished. the speed of engine in rpm is accurated.

ACKNOWLEDGEMENT

It gives us an extraordinary joy in exhibiting "Multi-Motor Synchronization Technique " as our B.E extend.

Indeed, even the best endeavors are squander, without the correct direction and counsel of our venture manage Prof. Nidhi Mishra for the predictable direction, co=operation, motivation, functional approach and productive feedback, which gave us the need catalyst to buckle down.

It is with awesome delight and endeavors that we can finish this venture. We have attempted our best to finish it in all regards.